Do not scale dimensions from this drawing.

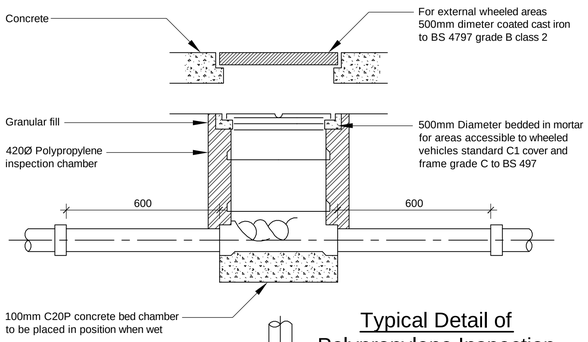

Typical Detail of Polypropylene Inspection Chamber Up To 4m Deep

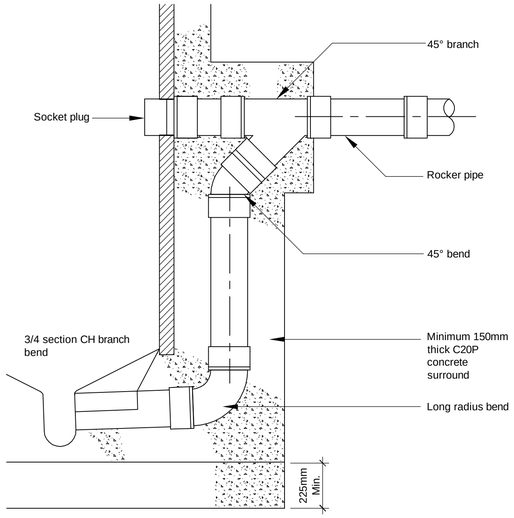

Typical Backdrop Detail

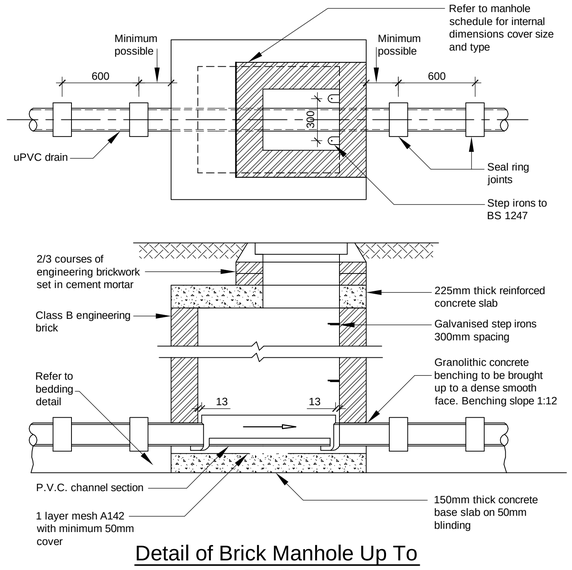

Detail of Brick Manhole Up To 2.5m Deep

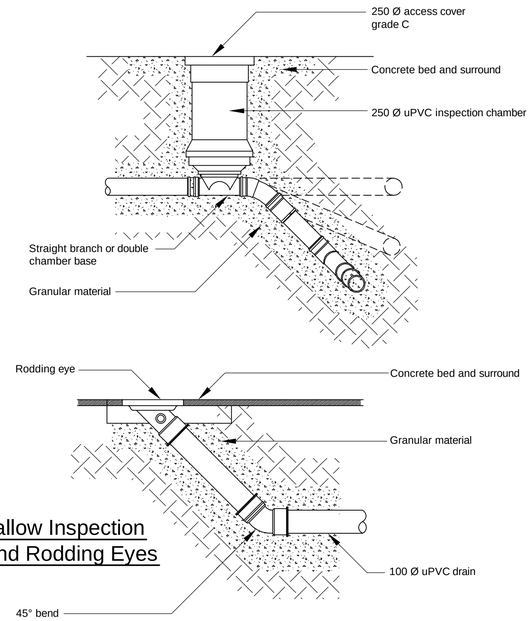

Typical Shallow Inspection Chambers and Rodding Eyes

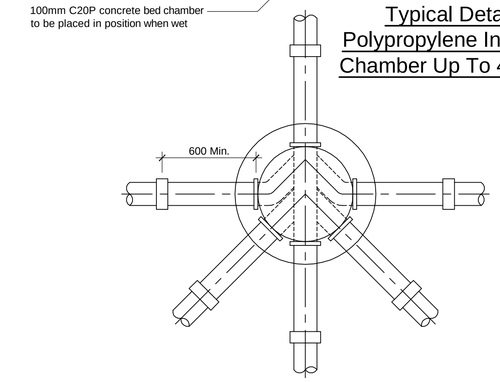

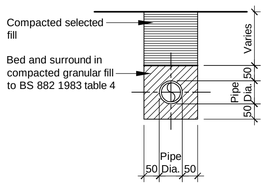

Typical Pipe Trench for Foul and Surface Water Drains

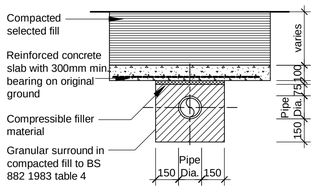

Typical Protection for Foul and Surface Water Drains When Laid With Less Than 600mm Cover

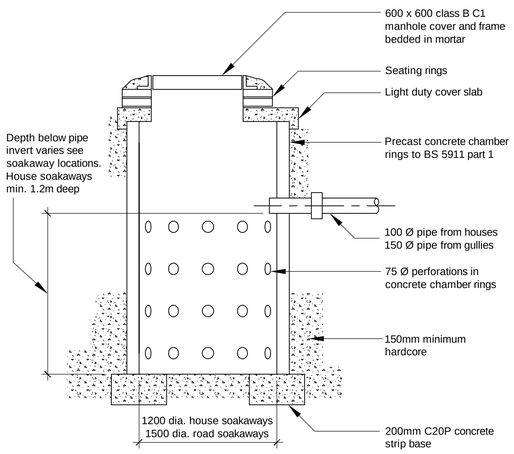

Typical Soakaway Detail

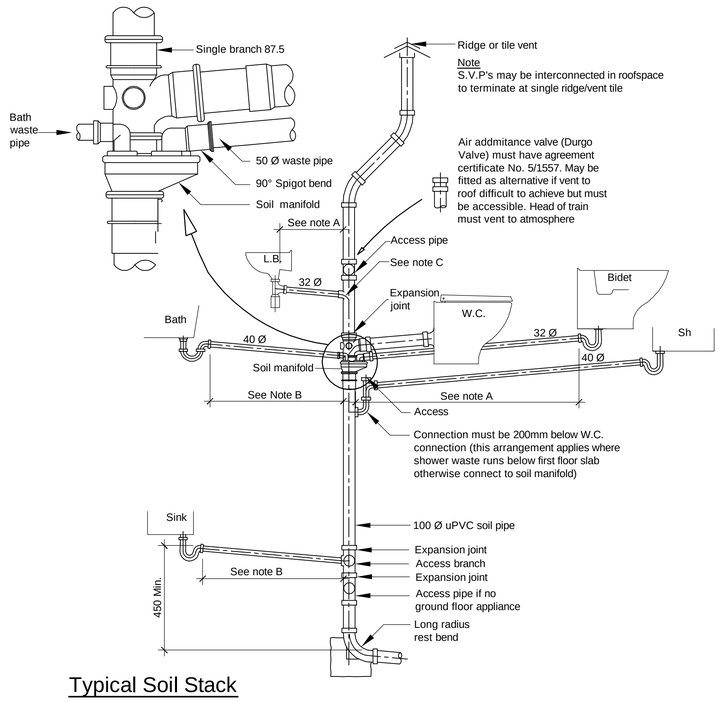

Typical Soil Stack

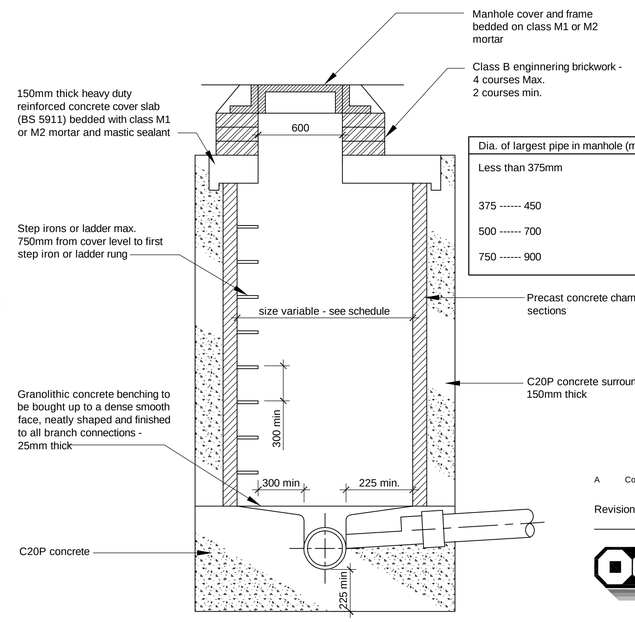

Dia. of largest pipe in manhole (mm)	Chamber section dia. (mm)
Less than 375mm	1200 (reducing to 1050 where depth to soffit is between 1.35m and 1.5m)
375 ------ 450	1350
500 ------ 700	1500
750 ------ 900	1800

Typical Concrete Ring Manhole Max Depth to Soffit - 3m

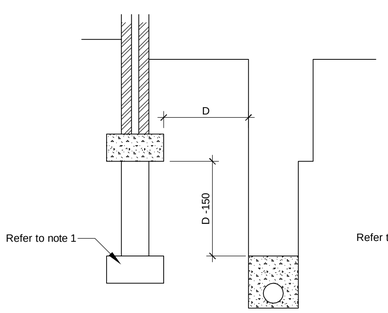

When 'D' is 1m or more, concrete fill is to within D - 150mm of level of foundation bottom

NOTE 1
In new work it is normally preferable to arrange for the foundations to be lowered

NOTE 2
Existing foundation situations will require temporary works including excavations in short lengths with full trench support

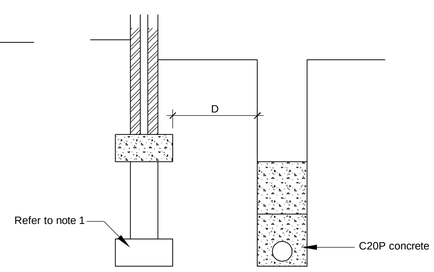

When 'D' is less than 1m concrete fill to level of foundation bottom

Detail of Drain Protection Adjacent to Foundations

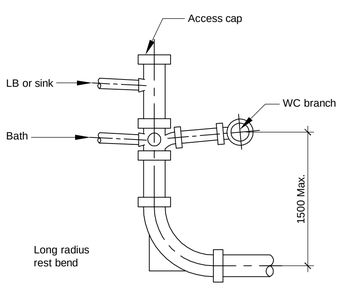

Typical Stub Stack

NOTES

A. Maximum distance 1.7m at 1° slope. If vertical drop or length exceeds 1.7m releasing trap must be fitted and wast increased to 40mm dia. 50mm from trap. Maximum length of waste is 3m.
If this length is exceeded a vent pipe must be fitted

B. Maximum distance 3m for 40mm dia.
If length exceeds 3m, pipe dia. must be increased to 40mm dia. max. length 4m.

C. Expansion coupling required if branch exceeds 1m

SUPPORT SPACINGS				
	Size (mm)	Max. support distance vertical	Metres Horizontal	Max. expansion joint distances
uPVC Soil	82	2.0	0.9	4.0
	110	2.0	1.0	4.0
	160	2.0	1.0	4.0
MuPVC Waste	32	1.2	0.5	2.0
	40	1.2	0.5	2.0
	50	1.2	0.5	2.0

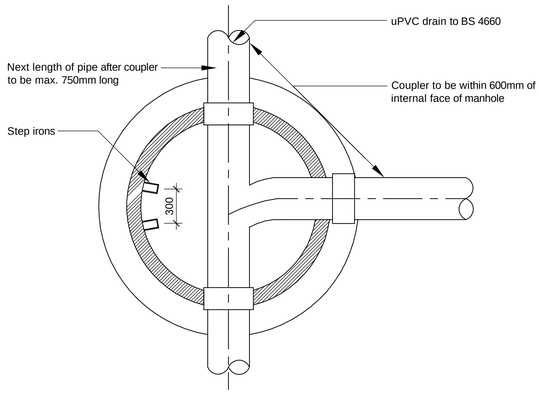

Revision	Date
A Construction Issue.	04.11.13

Octagon Developments Limited
Weir House Hurst Road
East Molesey Surrey KT8 9AQ
T: +44 (0) 208 481 7500
F: +44 (0) 208 481 7501
E: Octagon@Octdev.co.uk
W: www.Octdev.co.uk

Project
Overbye, St George's Hill

Title
Typical Soil & Waste and Underground Drainage Details

Status
Construction

Scale	Drawn	Date
n.t.s.	sh	Oct. '13
Job number	Drawing number	Revision
0623	**9001**	**A**

© Copyright Octagon Developments Limited