Do not scale dimensions from this drawing.

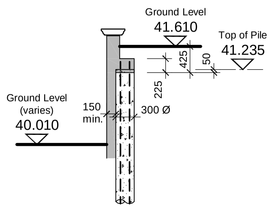

Detail A - A
Scale 1:50

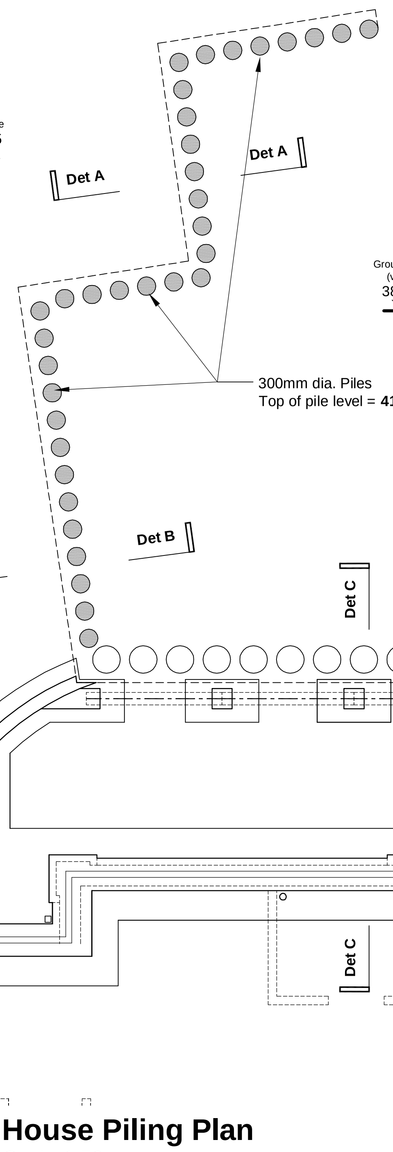

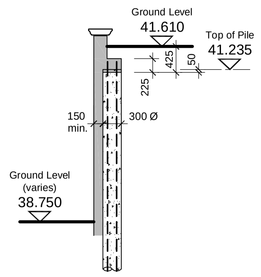

Detail B - B
Scale 1:50

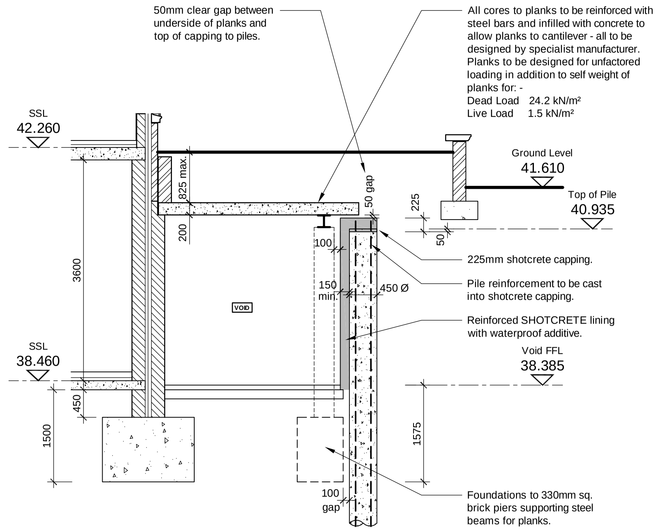

Detail C - C
Scale 1:50

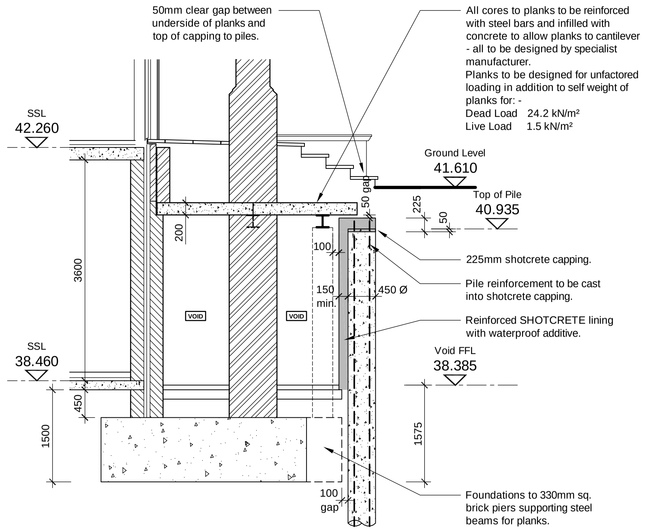

Detail D - D
Scale 1:50

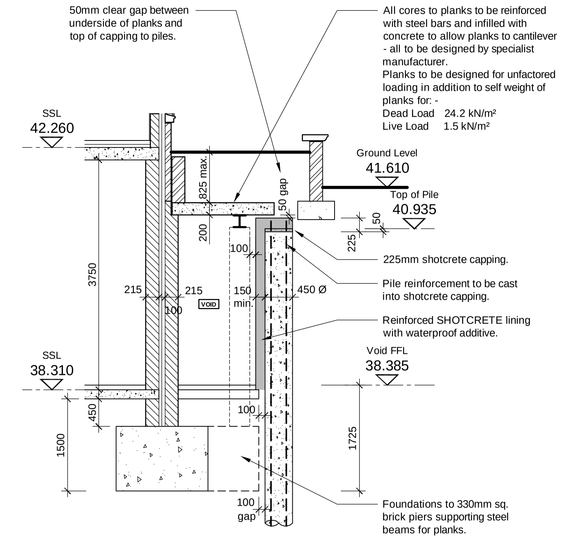

Detail E - E
Scale 1:50

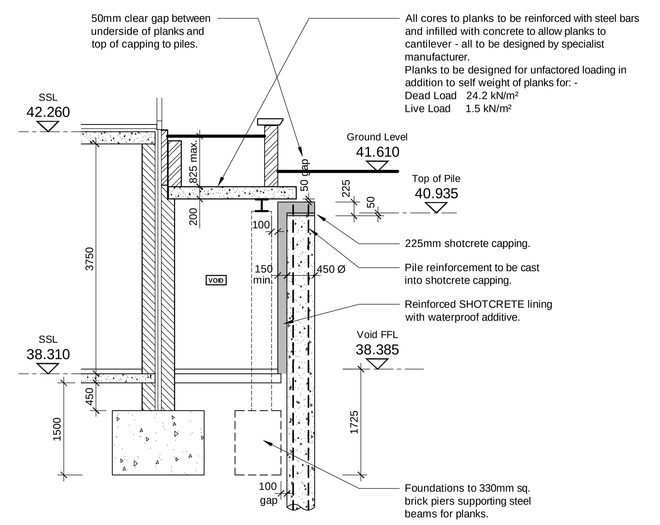

Detail F - F
Scale 1:50

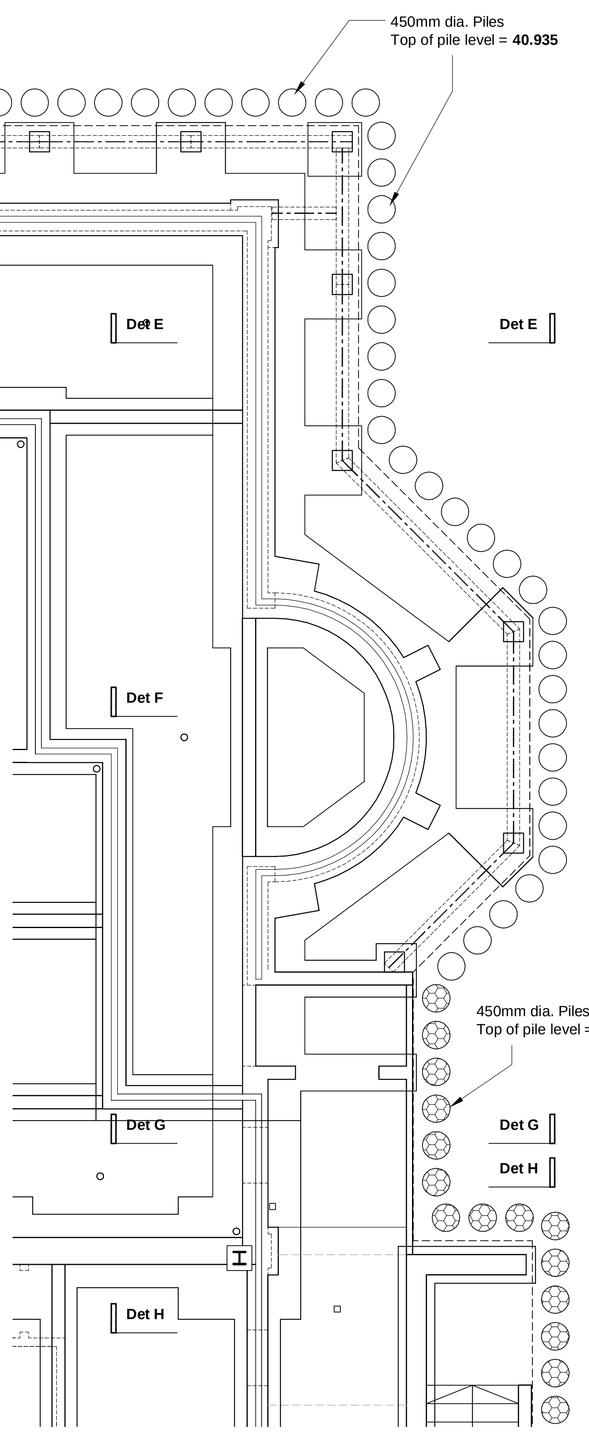

House Piling Plan
Scale 1:50

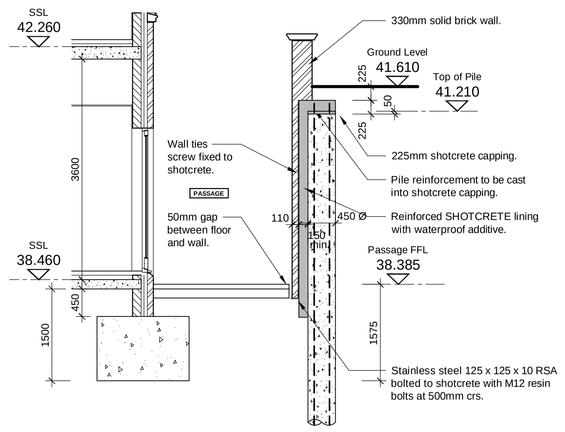

Detail G - G
Scale 1:50

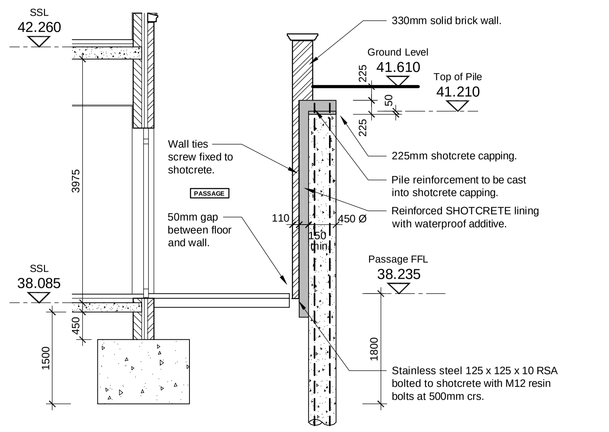

Detail H - H
Scale 1:50

Piling Notes

1. The design, materials and construction of all piles are to be in accordance with the latest relevant British Standards and Codes of Practice.
2. The piling contractor is to design the piles for a factor of safety of at least 2.5 on specified loadings.
3. The site investigation report prepared by Albury S.I. Ltd provides information on the ground conditions. If the piling contractor requires additional information to design the piles the cost of this investigation must be included in their overall costs.
4. The Contiguous Piled Cantilevered Retaining wall must be designed as a PERMANENT structure which will be subject to loading from construction vehicles and normal vehicular traffic in the long term. The piles must be designed to allow for a minimum ground surcharge loading of 10 kN/m² and vehicle single axle loading of 11.5 tonnes. The two loadings are not to be considered acting at the same time. The maximum deflection of the piles should be limited to 15 to 20mm.
5. The piling contractors design must allow for temporary excavation for foundations below the normal retained height as shown on the drawings - see foundation plans and sections.
6. The reinforced SHOTCRETE lining to the excavated face of the piles and top capping to piles is to be designed by a specialist caontractor and must include a waterproofing additive in the concrete. Piling reinforcement to be cast into shotcrete capping.
7. **ALL FOUNDATIONS WITHIN 2.5M FROM THE FACE OF THE CONTIGUOUS PILED RETAINING WALL MUST BE EXCAVATED IN SMALL SECTIONS AND CONCRETED IMMEDIATELY. DURING THIS PERIOD NO SURCHARGE FROM ANY CONSTRUCTION VEHICLES OR MATERIALS MUST BE PLACED ON THE RETAINED EARTH WITHIN 4.5M OF THE PILES AFFECTED BY THE FOUNDATION EXCAVATIONS.**
8. **THE SHOTCRETE LINING TO THE CONTIGUOUS PILES SHOULD ONLY BE APPLIED AFTER THE ANTICIPATED INITIAL/ CONSTRUCTION STAGE DEFLECTION HAS OCCURRED.**

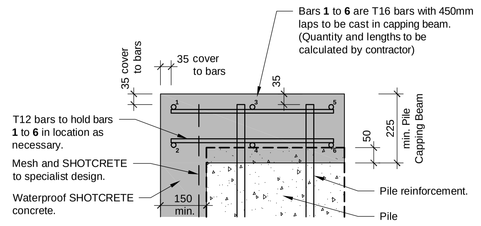

Typical Pile Head Detail
Scale 1:10

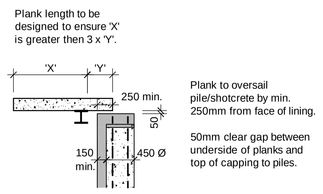

Typical Plank Design Criteria
Scale 1:50

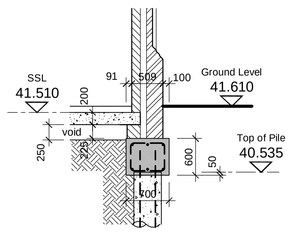

Detail L - L
Scale 1:50

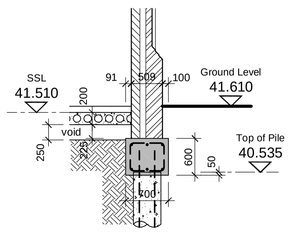

Detail M - M
Scale 1:50

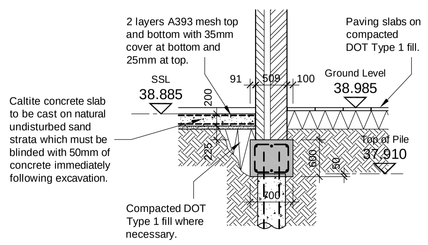

Detail N - N
Scale 1:50

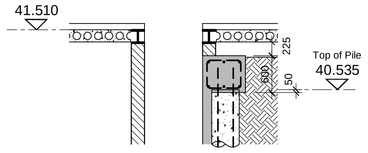

Detail P - P
Scale 1:50

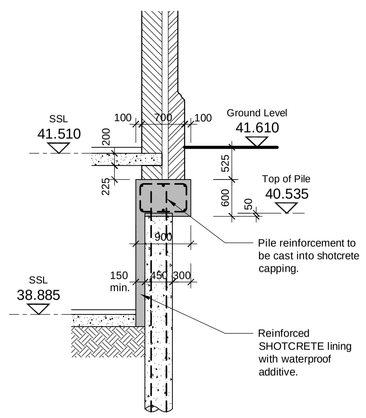

Detail J - J
Scale 1:50

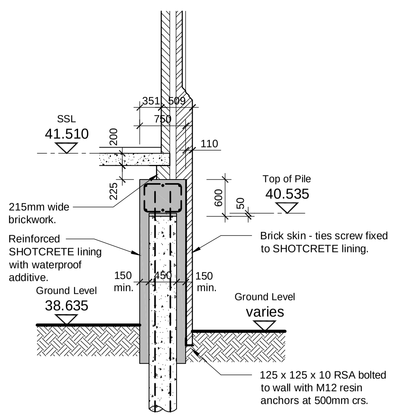

Detail K - K
Scale 1:50

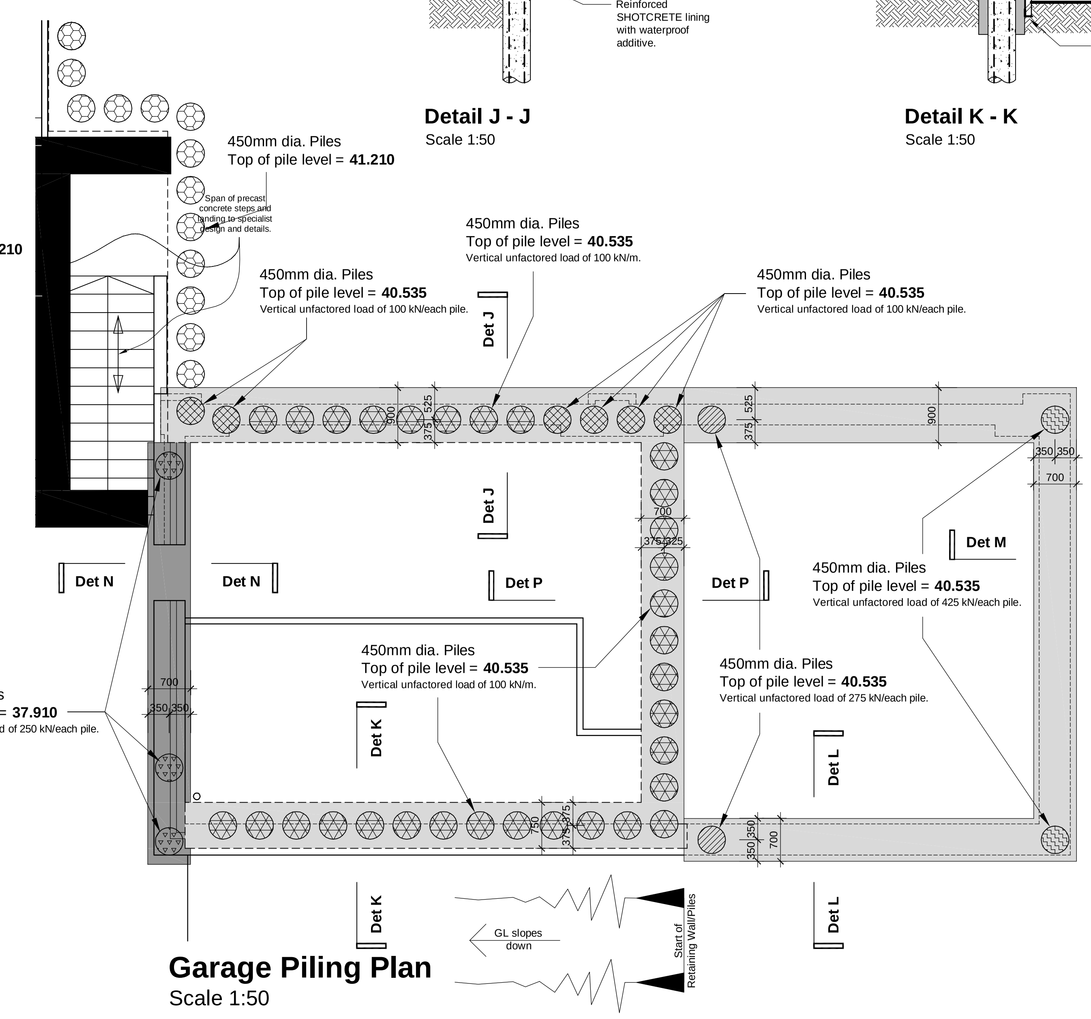

Garage Piling Plan
Scale 1:50

Piling Key

300mm dia. Contiguous Retaining Piles
Top of Pile Level = 41.235

450mm dia. Contiguous Retaining Piles
Top of Pile Level = 40.935

Top of Pile Level = 41.210

450mm dia. Contiguous Retaining & Loadbearing Piles to Garage
Top of Pile Level = 40.535
Vertical unfactored load = 100 kN/each pile

Top of Pile Level = 40.535
Vertical unfactored load = 100 kN/m

Top of Pile Level = 40.535
Vertical unfactored load = 275 kN/each pile

Top of Pile Level = 40.535
Vertical unfactored load = 425 kN/each pile

Top of Pile Level = 40.535
Vertical unfactored load = 250 kN/each pile

Drawing to be read in conjunction with Piling Setting Out Plan dwg. no. 0623/9002.

Revision		Date
E	Pile Head/Reinforcement detail added.	24.06.13
D	3 no. garage pile levels corrected to 37.910 on Plan (wall N-N).	30.05.13
C	Notes 7 & 8 added. Detail J-J lower SSL amended. Piles at top of steps adjacent to garage repositioned.	30.05.13
B	Garage piles re-positioned. House piles (Det C-C) re-positioned.	07.05.13
A	Construction Issue.	10.04.13

Octagon Developments Limited
Weir House Hurst Road
East Molesey Surrey KT8 9AY
T: +44 (0) 208 481 7500
F: +44 (0) 208 481 7501
E: octagon@octagon.co.uk
W: www.octagon.co.uk

Project
Overbye, St Georges Hill

Title
Piling Plan

Status
Construction

Scale	Drawn	Date
1:50	sh	Apr. '13
Job number	Drawing number	Revision
0623	2010	E

© Copyright Octagon Developments Limited